ARK-5260

Intel® Atom™ D510 with Dual PCI/PCIe Expansion and Dual Mobile HDDs

Features

- Extremely compact, sealed construction with fanless operation, supports Intel® Atom® D510 up to 1.66 GHz
- Supports 2 Giga LAN and 5 USB 2.0 ports
- Supports 4 RS-232/422/485 with Auto-flow control
- Built-in 1 x PCIe, and 2 x PCI expansion slots
- Rubber anti-vibration card-holder for PC expansion boards
- Supports wide power range of 12~ 24V DC input
- IP40

Specifications

Processor System	CPU	Intel® Atom™ D510 processor
	Max. Speed	1.66 GHz
	System Chipset	ICH8M
	BIOS	AMI 16Mb SPI Flash
Memory	Technology	Single channel DDR2 667 MHz
	Max. Capacity	2 GB SODIMM
	Socket	1 x 200-pin SODIMM
Graphics	Chipset	Embedded Gen3.5+ GFX Core technology, Direct X 9/Pixel Shader 2.0 compliant
	VRAM	Shared 224 MB
	Interface	VGA: Supports up to 2048 x 1536 @ 60 Hz
Ethernet	LAN1	10/100/1000 Mbps GigaLAN Controller, Supports Wake On LAN
	LAN2	10/100/1000 Mbps GigaLAN Controller, Supports Wake On LAN
Audio	Interface	Line-in, Line-out, Mic-in
IO Interface	Serial Ports	4 x RS-232/422/485 port, support Auto-flow control
	USB Interface	5 x USB ports, USB 2.0 compliant
	Keyboard/Mouse	1 x PS/2 port, supports PS/2 mouse and keyboard
	Parallel Port	Supports D-sub 25-pin connector
	DIO	Supports 8-bit digital IO
Other	Watchdog timer	255 levels timer interval, setup by software
	COM LED	4 COM LED lighting
Storage	HDD	Supports two drive bays space for SATA 2.5" HDD (9.5 mm height only)
	SSD	Supports one internal CompactFlash socket for type I/II CompactFlash disk
Expansion	PCI/PCIe Slot	2 PCI Slot, and 1 PCIe x1 Slot Supports maximun 15W power for expansion Supports maximum dimension of 99 mm (width) x 186 mm (length) for expansion PC board
Software Support	Microsoft Windows	Win 7, XP Embedded, WinCE 6.0
	Linux	
Power Requirement	Power Type	AT/ATX
	Power Input Votage	12 V_{DC} ~ 24 V_{DC}
	Minimum Power Input	12 V @ 5 A ~ 24 V @ 2.5 A
	Power Adapter	AC-to-DC, 65 W DC19 V/3.4 A
Power Consumption	Typical	20W
	Max.	23W
Mechanical	Construction	Aluminum housing
	Mounting	Desk/wall-mounting
	Dimensions (W x H x D)	137 x 189 x 221 mm (5.39" x 7.44" x 8.70")
	Weight	4.2 kg (9.24 lbs)
Environment	Operating Temperature	With extend temperature peripherals 2.5-inch HDD without PC expansion Boards: 0 ~ 45° C With extend temperature peripherals CompactFlash disk without PC expansion Boards: -20 ~ 55° C
	Storage Temperature	- 40 ~ 85° C (-40 ~185° F)
	Relative Humidity	95% @ 40° C (non-condensing)
	Vibration Loading During Operation	With 2.5-inch HDD: 1 Grms, IEC 60068-2-64, random, 5 ~ 500 Hz, 1 Oct./min, 1 hr/axis With Compact Flash disk: 5 Grms, IEC 60068-2-64, random, 5 ~ 500 Hz, 1 Oct./min, 1 hr/axis
	Shock During Operation	With 2.5-inch HDD: 20 G, IEC 60068-2-27, half sine, 11 ms duration With Compact Flash disk only: 50 G, IEC 60068-2-27, half sine, 11 ms duration
	EMC	CE/FCC, CCC, BSMI
	Safety Certifications	CCC, BSMI

All product specifications are subject to change without notice
Last updated : 11-Jan-2011

Dimensions

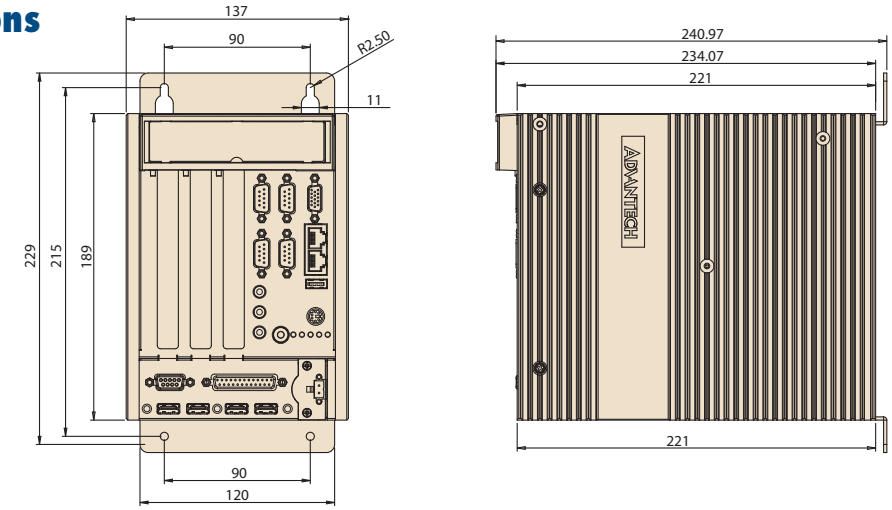

Unit: mm (inch)

Front Panel External I/O Mechanical Layout/Drawing

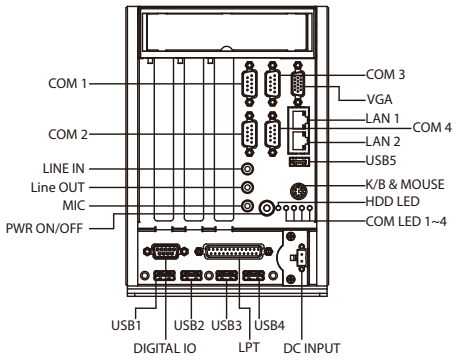

Rear Panel External I/O Mechanical Layout/Drawing

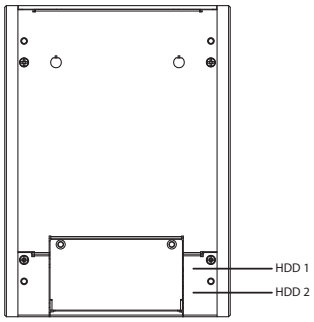

Packing List

Part Number	Description
-	1 x ARK-5260 Unit
-	1 x Utility CD
-	1 x User Manual (Simplified Chinese)
1960049826N001	1 x Mounting bracket upper
1960049827N001	1 x Mounting bracket lower
1990000505	3 x shock proof rubber

Ordering Information

Part Number	Description
ARK-5260F-D5A1E	Atom D510 1.66 GHz embedded box computer, with VGA, 2 x GbE, 5 x USB ports, 4 x COM ports, audio, 2xPCI and 1xPCIe expansion slots

Optional Items

Part Number	Description
1757003659	AC-to-DC Adapter, DC19 V/3.42A 65 W, with phoenix power plug
1700001947	Power cable 2-pin 180 cm, USA for ARK-338X
1700001948	Power cable 2-pin 180 cm, Europe for ARK-338X
1700001949	Power cable 2-pin 180 cm, UK for ARK-338X
1757000537	AC-to-DC Adapter 4-Pin DC 19V/6.32A, 120 W
*1700018474	4-pin DC connector cable (compatible with 1960048412N001)
*1960048412N001	4-pin DC bracket for ARK-5260 (compatible with 1700018474)
1700060202	PS/2 keyboard/mouse cable

* for project base

Embedded OS

Part Number	Description
2070010215	Windows XP Embedded WES2009 for ARK-5260, English version (610 MB)
2070010216	Windows XP Embedded WES2009 for ARK-5260, 24-in-1 languages version (610 MB)
2070010257	WinCE 6.0 Pro ARK-5260 V1.3 ENG (customized BIOS required)